REV.	SPECIFICATION	ECN NO.	APPD.
R2		ECN080906	

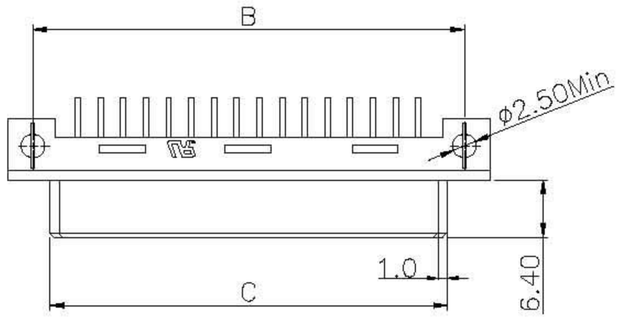

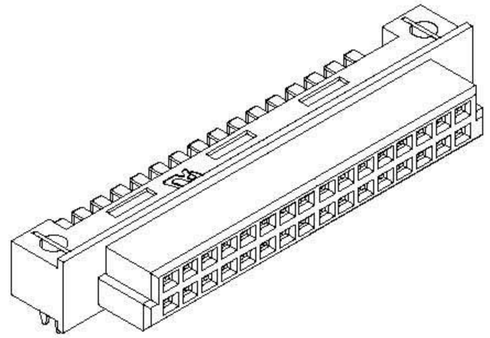

Material:

Housing:30% Glass Filled PBT UL94V-0.
Contacts: Phosphor Bronze
Lock: Phosphor Bronze

Electrical Characteristics:

Current Rating: 2 AMP.
Dielectric Withstanding Voltage: AC1000V For 1 minute.
Insulator Resistance: 1000MΩ min. at DC 500V.
Contact Resistance: 30mΩ max. at DC 100mA.
Operating Temperature: -55°C ~+105°C .

***RoHS Compliant**

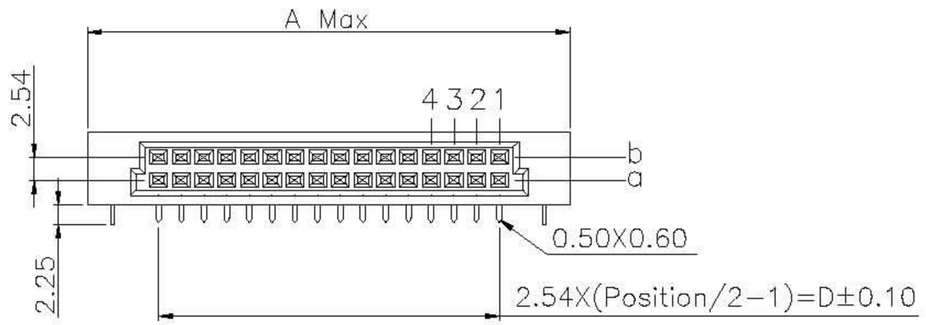

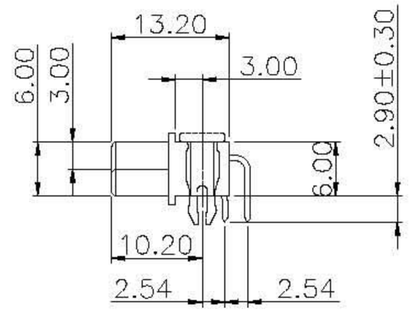

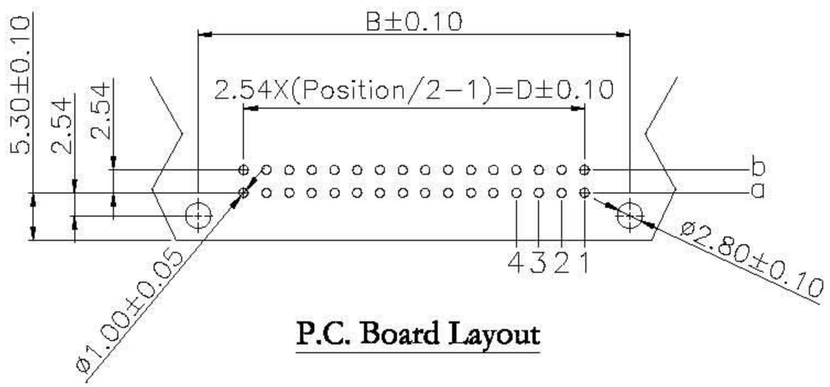

P.C. Board Layout

Tolerances	Drawn No.		Title:	GXCON ENTERPRISE CO., LTD
x = ±0.5	Projection		DIN41612 Half	P/N: DIN-232F200A
.x = ±0.25	Unit mm	Scale 1:1	Q Type Female	SHEET 1/1 Ver.No. R2
.xx = ±0.15	Drawn By	FHY09/27'08		